CERTEX | Lifting Solutions Group
Axel Johnson International

Lifting Eye TAPG/TAPG-S

Product information



The TAPG and TAPG-S screw-on attachment point is a rotatable lifting point designed for industrial lifting, assembly, and transport applications. Available both with and without fastening screw, it provides flexible integration for machinery, fabricated structures, and equipment requiring a defined lifting connection.

Best used for:

- Machinery, steel fabrications, and industrial equipment.
- Applications requiring a compact rotating lifting point.
- Installations needing either supplied or customer-selected screws.

Product benefits:

- Rotatable lifting ring supports improved load alignment.
- Available with or without screw for installation flexibility.
- Compact bolt-on design integrates easily into equipment.
- Suitable for multi-directional industrial lifting applications.
- Defined WLL capacities support clearer lifting planning.

Model TAPG: Lifting D-Ring and Bridge - without Screws.

Model TAPG-S: Lifting D-ring, bridge and 2 screws 8.8 EN 24014 (DIN 931)
... *Read more*

Material: Eye of alloy steel.
Marking: CE-mark, UKCA-marked, WLL.
Note: The surface that the lifting eyes shall be attatched to shall be flat and tolerate the load it is going to be exposed to.
Warning: Only screws with a minimum strength class of 8.8 EN 24014 (DIN 931) may be used

Safety factor: 4:1

© November 2026 - All Rights Reserved

CERTEX | Lifting Solutions Group
Axel Johnson International

Lifting Eye TAPG/TAPG-S

Blueprint

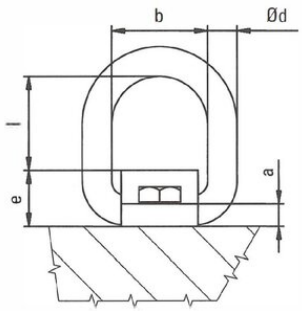

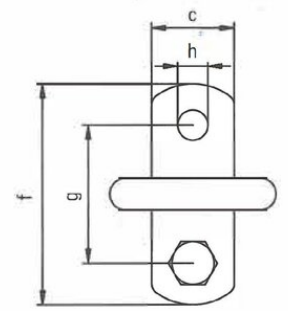

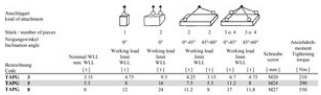

Technical data

Part code	Code	WLL ton	Thread mm	Torque Nm	a mm	b mm	c mm	Ø d mm mm	e mm	f mm	g mm	h mm	l mm	Weight kg
42150380503200	TAPG 3	3.15	M20	210	12	56	50	18	34	130	90	21	51	1.08
42150380505200	TAPG 5	5.3	M24	290	15	67	60	22	42	160	110	25	63	2.04
42150380508200	TAPG 8	8	M27	550	20	80	70	26	55	190	130	28	67	3.58

© November 2026 - All Rights Reserved