Lifting Solutions Group
Axel Johnson International

High lift pallet truck

Product information

Pallet jack that lifts up to 800 mm to be used in industry, delivery firms etc. Equipped with PU wheels and 210° turning angle.

... *Read more*



Features: Wheels: PU
Material: Steel
Marking: CE-mark
Finish: Painted

© November 2026 - All Rights Reserved

High lift pallet truck

Technical data

Part code	WLL ton	Width of forks mm	Length of forks mm	Minimum height of fork mm	Max. lifting height mm	Weight kg
9001HAVA1SAKSI	1	550	1,150	0.8	800	110

SPARE PARTS

Spare part (product code)	Description	Suitable for pallet truck (product code)
HAVA1SAKISO	Steering (big) wheel, incl. bearings | Part no. 8 + 9	HAVA1SAKSI
HAVA1SAKEPYO	Front (loading) wheel, incl. bearings | Part no. 14 + 13	HAVA1SAKSI
HAVA1SAKTI	Gasket set	HAVA1SAKSI
HAVA1SAKJOU10	Piston spring | Part no. 10	HAVA1SAKSI
HAVA1SAKOHJAUSR	Guide wheel for scissor mechanism, 1 pc | Part no. 16	HAVA1SAKSI
Also other spare parts available with a delivery time, ask our sales for more information		

HANDLE-ASSY

© November 2026 - All Rights Reserved

High lift pallet truck

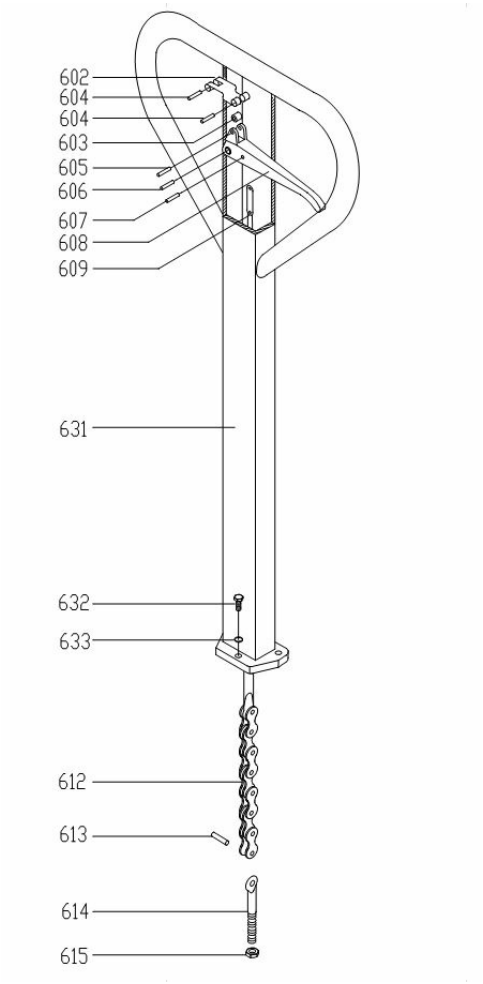

STEERING-PUMP UNIT

© November 2026 - All Rights Reserved

High lift pallet truck

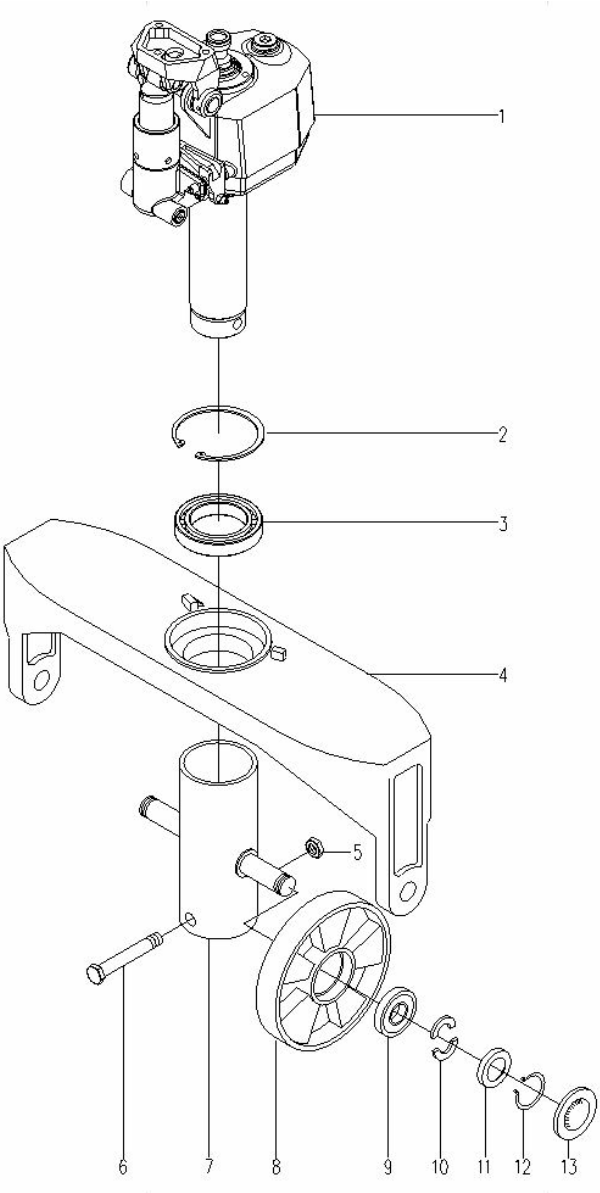

HYDRAULIC PUMP UNIT

© November 2026 - All Rights Reserved

High lift pallet truck

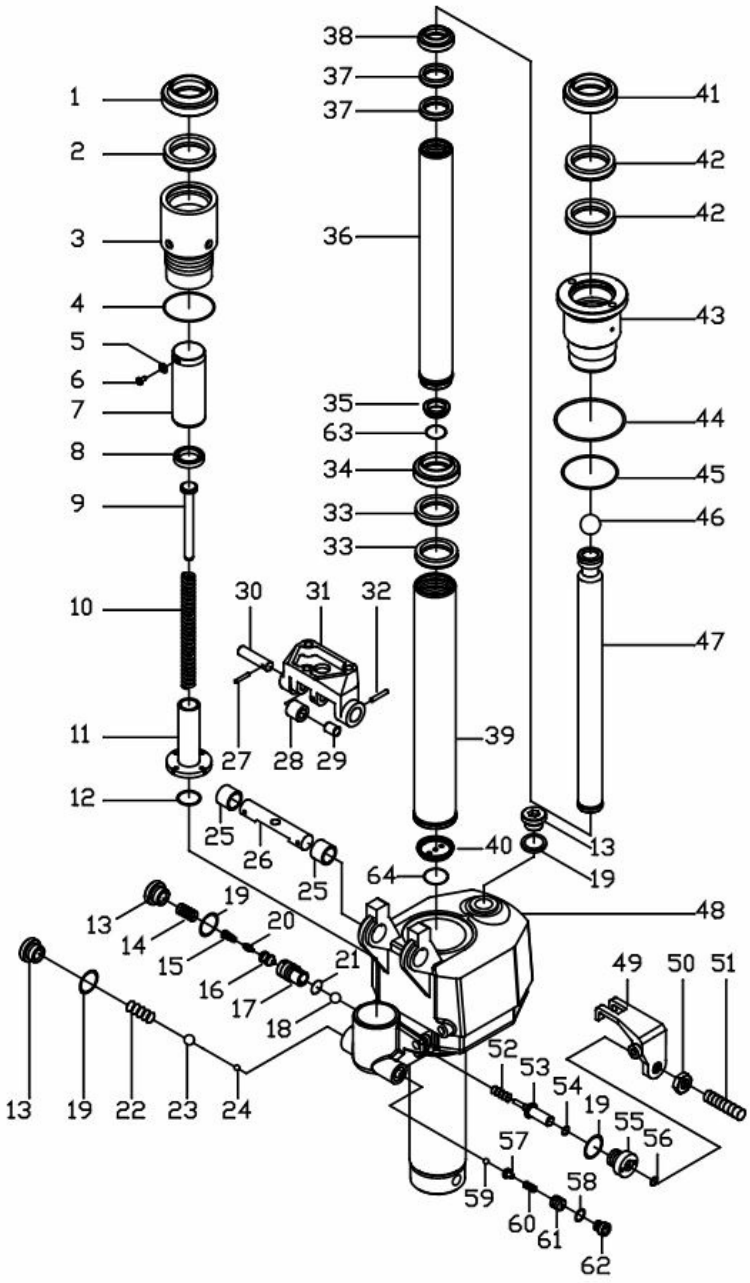

FRAME

© November 2026 - All Rights Reserved

Lifting Solutions Group
Axel Johnson International

High lift pallet truck

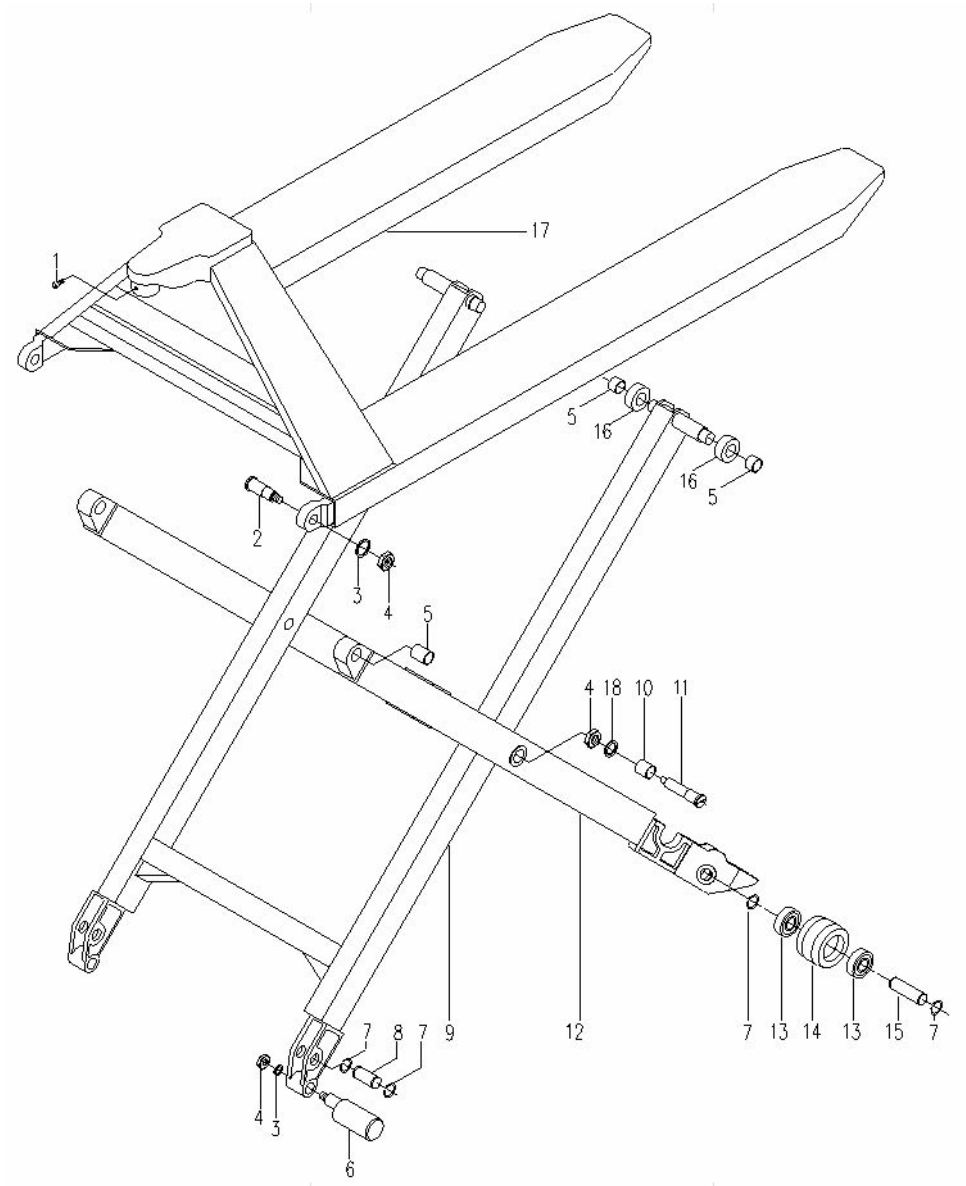

© November 2026 - All Rights Reserved