CERTEX | Lifting Solutions Group
Axel Johnson International

Electric pallet truck

Product information



Easy-to-use, lightweight, durable and compact size electric pallet truck. Available in two different fork lengths, 1150 and 1800 mm. Equipped with electric lifting and lowering functions. Due to the stepless driving motor and small turning radius (1353 mm), the pallet truck is easy to use in narrow spaces and corridors. Max travelling speed 4-5 km/h depending of load. Hill climbing ability, empty 20% and loaded 6%. 10 Ah lithium battery ensures 3 hours of continuous operating time depending on the load. Separate charger enables charging of an additional battery during the use of the electric pallet truck. Charging time of the battery is 5 hours. Carbon brushless motor ensures carefree use and fast maintenance.

Product code of extra battery: **HAVA1500ELECAKKU**
Product code of charger (2 Ah): **HAVA1500ELECLATURI**

Content of the delivery:
- Electric pallet truck
- 1 pcs battery 48V / 10 Ah
- 1 pcs charger 2 Ah

... *Read more*

Temperature range: -10°C - (+)55°C
Note: Different from the picture, there are double bogey wheels in front of the forks

© November 2026 - All Rights Reserved

Electric pallet truck

Technical data

Part code	WLL ton	Width of forks mm	Length of forks mm	Minimum height of fork mm	Motor kW	Max. lifting height mm	Power of lifting motor kW	Weight kg
9001HAVA1500ELEC	1.5	550	1,150	82	0,75	197	0,8	117
9001HAVA1500ELECPI	1.5	550	1,800	82	0,75	197	0,8	157

SPARE PARTS

Spare part (product code)	Description	Suitable for pallet truck (product code)
HAVA1500ELECAKKU	Battery | 48 V, 10 Ah	HAVA1500ELEC, HAVA1500ELECPI
HAVA1500ELECLATURI	Charger	HAVA1500ELEC, HAVA1500ELECPI
HAVA1500ELECOP	Drive wheel | ø 140 x 55 mm	HAVA1500ELEC, HAVA1500ELECPI
*HAVA25PUTELIS/-TELI	*Fork wheel | ø 80 x 70 mm, PU	HAVA1500ELEC, HAVA1500ELECPI
HAVA1500ELECHS	Frame emergency stop switch, ass'y	HAVA1500ELEC, HAVA1500ELECPI
HAVA1500ELECHSA	Handle emergency stop switch, incl. spring	HAVA1500ELEC, HAVA1500ELECPI
HAVA1500ELECAISA	Complete handle (incl. electronics)	HAVA1500ELEC, HAVA1500ELECPI
HAVA1500ELECJAR	Brake ass'y	HAVA1500ELEC, HAVA1500ELECPI

*Note: the color of the wheel differs from the original

Also other spare parts available, ask our sales for more information.

FRAME

© November 2026 - All Rights Reserved

Electric pallet truck

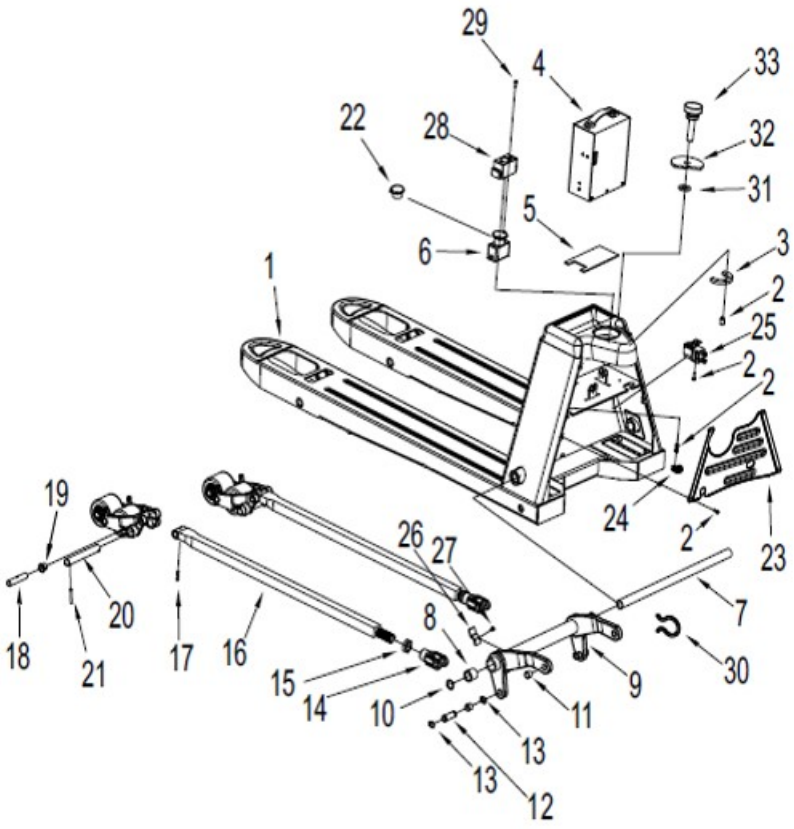

HANDLE ASSY

© November 2026 - All Rights Reserved

Electric pallet truck

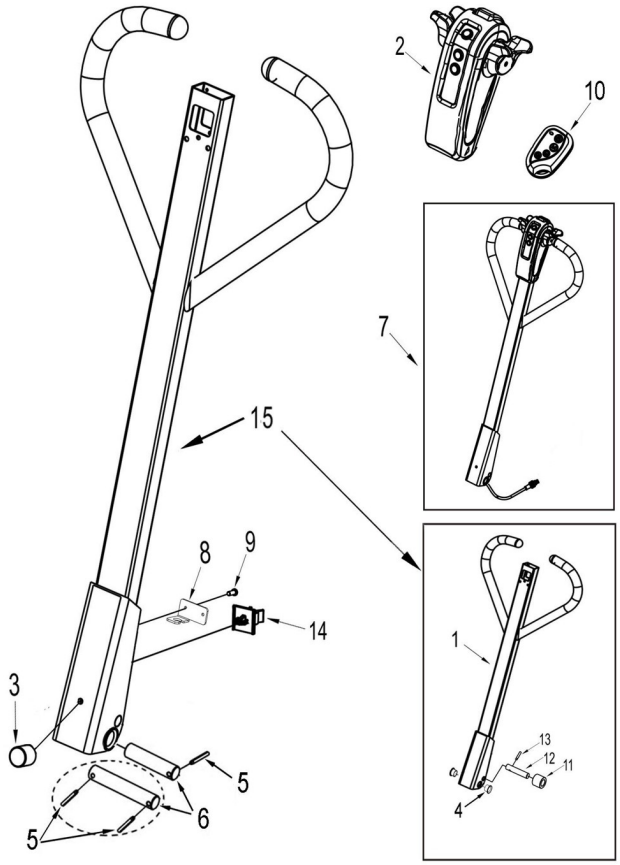

HYDRAULIC SYSTEM

© November 2026 - All Rights Reserved

Electric pallet truck

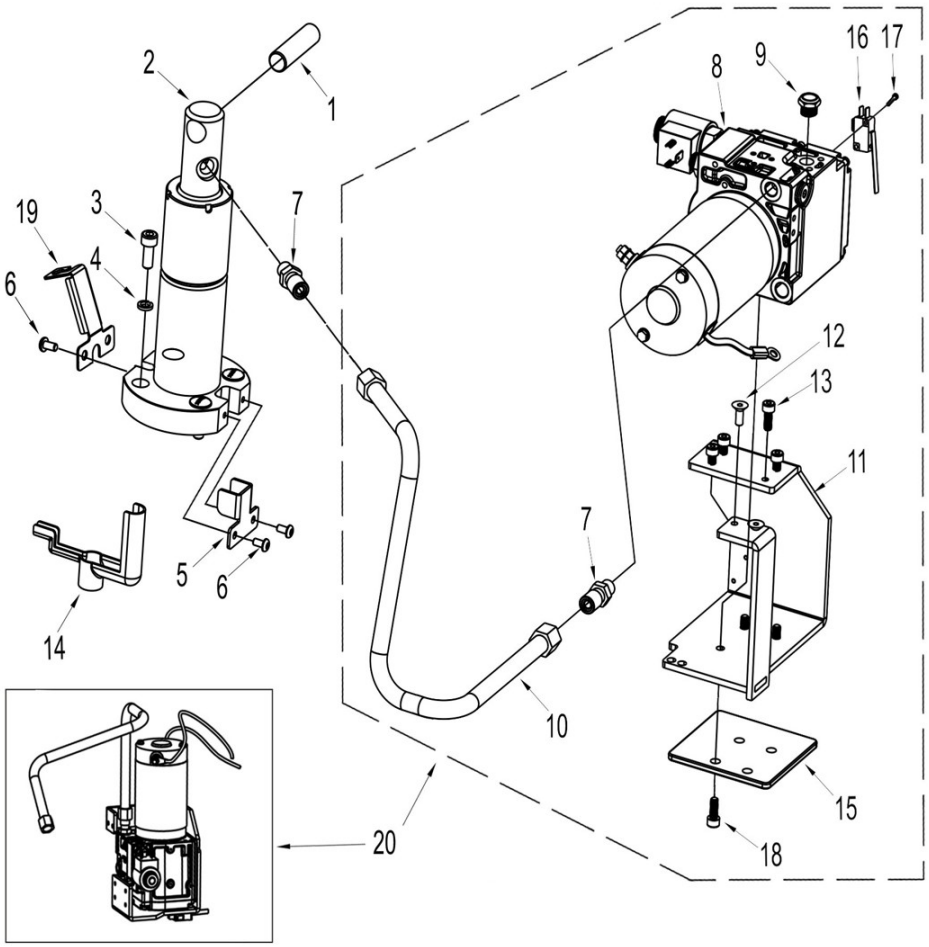

CYLINDER

© November 2026 - All Rights Reserved

Electric pallet truck

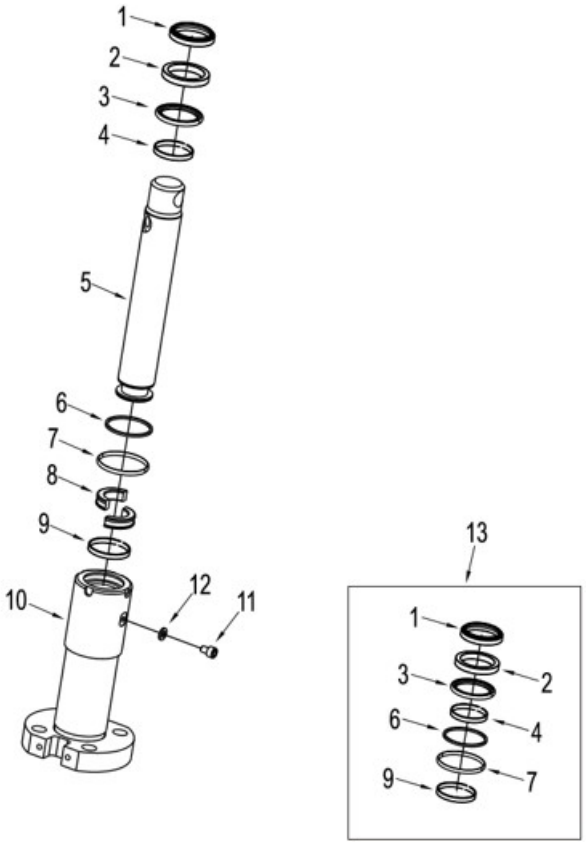

DRIVE SYSTEM

© November 2026 - All Rights Reserved

Electric pallet truck

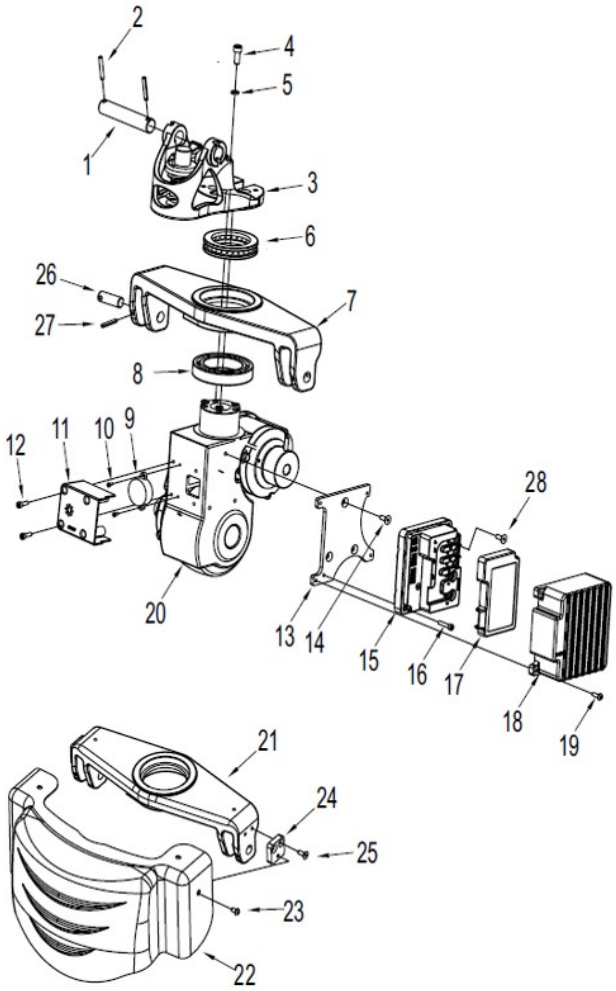

DRIVE UNIT

© November 2026 - All Rights Reserved

Electric pallet truck

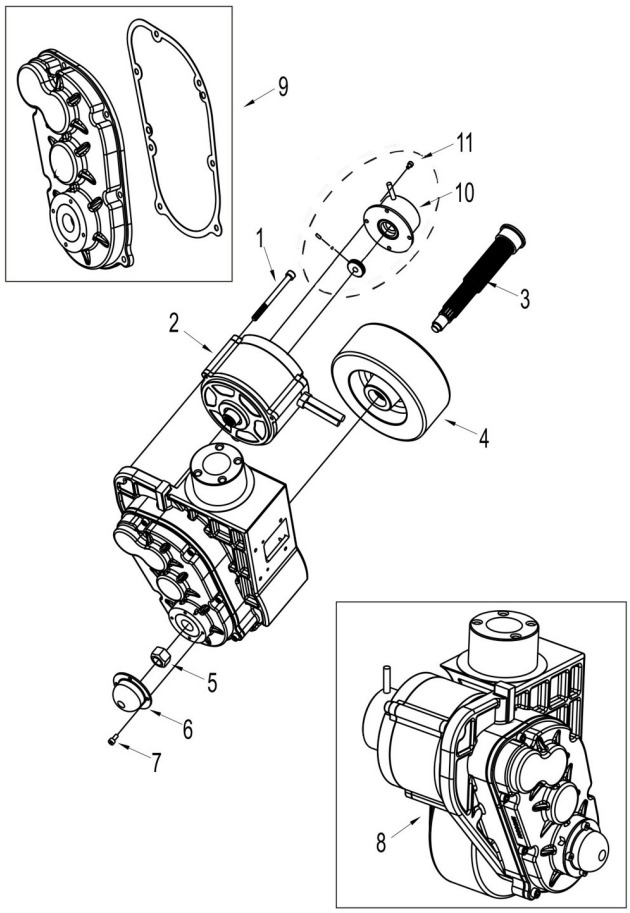

FORK-LOADING WHEEL

© November 2026 - All Rights Reserved

Lifting Solutions Group
Axel Johnson International

Electric pallet truck

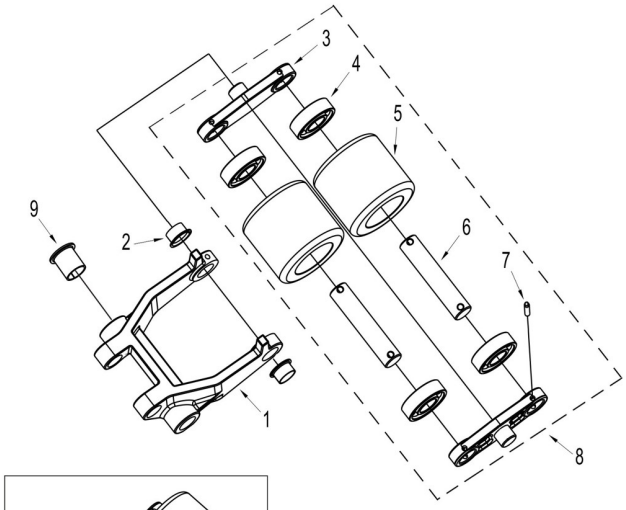

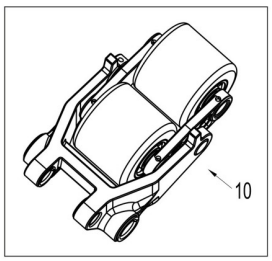

© November 2026 - All Rights Reserved