Lifting Solutions Group
Axel Johnson International

Lever Hoist Powertex PLH-S2OLP with Corolim® Chain

Product information



The Powertex PLH-S2 OLP Chain Hoist is a high-quality lever hoist designed to provide durability, safety, and ease of operation. With its ergonomic ratchet lever, safety-added features, and built-in overload protection, this chain hoist ensures smooth and efficient lifting for various industrial applications. This OLP version has an integrated Overload Protection, which ensures safe lifting and prevents unintended overloading of the hoist.

Product benefits:

Overload protection device: the OLP hoists are factory-equipped with an Overload Protection device, which limits the maximum operating force that can be applied using the hand chain, ensuring safe and controlled lifting operations.

Enhanced safety: each hoist undergoes dynamic proof load testing at 1.5 times the Working Load Limit (WLL) before leaving the factory, ensuring maximum safety and reliability. The hoist is equipped with a well-covered automatic load reaction brake and features double safety with two brake pawls and four brake springs, exceeding EN 13157 requirements. The load chain is calibrated, proof load tested and meets the requirements of EN 818-7.

Smooth and efficient operation: the compact and lightweight construction, combined with a sprocket wheel equipped with needle bearings and a drive shaft supported by needle and slide bearings, ensures smooth and efficient operation. The fine-calibrated European-made COROLIM® protected load chain offers quiet and seamless performance.

Load chain with superior corrosion resistance: the unique COROLIM® surface treatment of the load chain provides excellent corrosion protection, equivalent to ISO944-9 C5High / ISO9223 C3 standards, ensuring long-lasting durability even in harsh environments.

Easy positioning and safe hooks: swivel hooks at both ends make in-line positioning easy. The hooks are designed to open at overload insta... *Read more*

Material: Durable all steel construction
Marking: According to standard, CE-mark, UKCA-marked, Powertex, Model, WLL, Chain, Serial number, User manual/QR code
Temperature range: -10°C up to +50°C
Finish: Powder coated finish and plated frame components
Standard: EN 13157, EN 818-7

Safety factor: 4:1

© November 2026 - All Rights Reserved

Lifting Solutions Group
Axel Johnson International

Lever Hoist Powertex PLH-S2OLP with Corolim® Chain

Blueprint

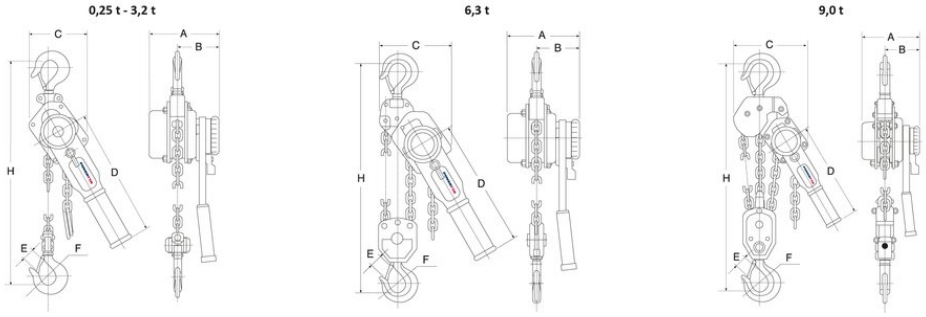

Technical data

Part code	WLL ton	Lifting height m	Number of falls	Model	Load chain mm	Hand force max. kg	A mm	B mm	C mm	D mm	E mm	F mm	H min mm	Weight kg
500500050150471	0.5	1.5	1	PLH-S2OLP/500KG PHC	5,0 x 15,0	24.8	150	90	118	253	22	32	310	5.3
500500050300471	0.5	3	1	PLH-S2OLP/500KG PHC	5,0 x 15,0	24.8	150	90	118	253	22	32	310	6
500500080300471	0.8	3	1	PLH-S2OLP/800KG PHC	5,6 x 17,0	26.5	158	98	132	273	26	36	340	7.6
500500080150471	0.8	1.5	1	PLH-S2OLP/800KG PHC	5,6 x 17,0	26.5	158	98	132	273	26	36	340	8.1
500500160150471	1.6	1.5	1	PLH-S2OLP/1600KG PHC	7,1 x 21,0	29.5	185	111	145	378	29	43	400	11.1
500500160300471	1.6	3	1	PLH-S2OLP/1600KG PHC	7,1 x 21,0	29.5	185	111	145	378	29	43	400	12.6
500500320150471	3.2	1.5	1	PLH-S2OLP/3200KG PHC	10,0 x 28,0	33.5	212	124	198	418	37	50	520	20.5
500500320300471	3.2	3	1	PLH-S2OLP/3200KG PHC	10,0 x 28,0	33.5	212	124	198	418	37	50	520	20.5
500500630150471	6.3	1.5	2	PLH-S2OLP/6300KG PHC	10,0 x 28,0	37	212	124	230	418	43	53	640	24.6
500500630300471	6.3	3	2	PLH-S2OLP/6300KG PHC	10,0 x 28,0	37	212	124	230	418	43	53	640	31.2
500500900150471	9	1.5	3	PLH-S2OLP/9000KG PHC	10,0 x 28,0	42	212	124	338	418	44	67	730	50
500500900300471	9	3	3	PLH-S2OLP/9000KG PHC	10,0 x 28,0	42	212	124	338	418	44	67	730	60

© November 2026 - All Rights Reserved