Lifting Solutions Group
Axel Johnson International

Screw suspension eye DSR/DSS

Product information



DSR-up



DSS-up

Marking: According to standard, CE-mark, Rotatable under load.
Standard: EN 1677-1
Note: The ring is 180° foldable and has a rotating range of 360°

© November 2026 - All Rights Reserved

CERTEX | Lifting Solutions Group
Axel Johnson International

Screw suspension eye DSR/DSS

Blueprint

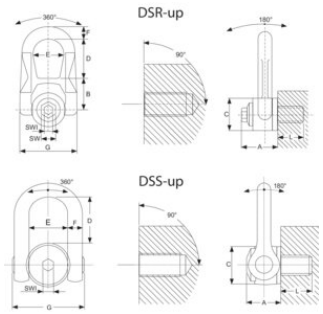

Technical data

Part code	Code	WLL ton	Thread mm	Model	A mm	B mm	C mm	D mm	E mm	F mm	G mm	L mm	SWlmm mm	SW mm	Weight kg
4215	8717365177552	0.4	M8	DSR-UP M8/400KG	33	30	30	38	27	14	53	15	8	16	0.3
4215	8717365177392	0.7	M10	DSR-UP M10/700KG	33	30	30	38	27	14	53	18	8	16	0.3
4215	8717365012068	1.05	M12	DSR-UP M12/1050KG	33	30	30	38	27	14	53	21	8	16	0.3
4215	8717365012075	1.4	M14	DSR-UP M14/1400KG	45	40	45	53	38	17	76	23	8	20	0.9
4215	8717365012082	2	M16	DSR-UP M16/2000KG	45	40	45	53	38	17	76	27	8	20	0.9
4215	8717365012099	2.3	M18	DSR-UP M18/2300KG	45	40	45	53	38	17	76	27	8	20	0.9
4215	8717365012105	2.5	M20	DSR-UP M20/2500KG	45	40	45	53	38	17	76	30	8	20	0.9
4215	8717365012112	3.5	M22	DSR-UP M22/3500KG	62	55	60	83	55	25	115	33	14	24	2.6
4215	8717365012129	4.4	M24	DSR-UP M24/4400KG	62	55	60	83	55	25	115	36	14	24	2.6
4215	8717365012136	6.3	M30	DSR-UP M30/6300KG	62	55	60	83	55	25	115	45	14	24	2.7
4215	8717365177484	8	M36	DSR-UP M36/8000KG	80	77	78	98	71	26	141	54	14	30	5.4
4215	8717365177491	8.5	M42	DSR-UP M42/8500KG	80	77	78	98	71	26	141	63	14	30	5.5
4215	8717365177507	11	M36	DSS-UP M36/11000KG	61	31	70	104	73	149	33	54	19	-	5.5
4215	8717365177514	13	M42	DSS-UP M42/13.000KG	61	31	70	104	73	149	33	68	19	-	11
4215	8717365012174	22	M56	DSS-UP M56/22.000KG	79	38	90	125	91	182	45	78	19	-	11.3
4215	8717365258572	25	M64	DSS-UP M64/25.000KG	79	38	95	125	91	182	45	90	19	-	12.2

© November 2026 - All Rights Reserved